Atlanta 48” x 32” Pedestal Tables

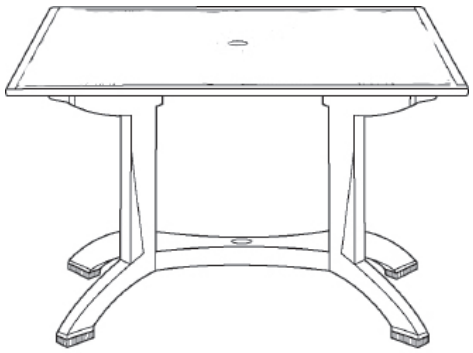

Length: 48”
Width: 32”
Height: 29”
Weight: 42.9 lbs

Product Specifications

Product Description	Reference Number	Color	UPC Code 014306	Weight Each (lbs.)	Master Pack	Master Pack Volume (cu. ft)
Atlanta 48” x 32” Pedestal Tables	UT385018	Wicker Decor	936970	51.00	1	5.51
	UT385008	Teak Decor	936963	51.00	1	5.51
	UT385004	White	936956	51.00	1	5.51
	UT385720	Shiplap	936949	51.00	1	5.51

Features & Benefits

Warranty: 1 Yr.

- Large 4-prong pedestal base for stability.
- Base is constructed of 100% prime resin.
- Umbrella hole with cap to fit any Grosfillex® umbrella with a 1 ½” pole
- Easy to clean with soap & water or a mild detergent.
- Table base will accommodate the Grosfillex® resin umbrella base with filling cap.

The Atlanta 48” & 32” Square Pedestal Tables are perfect for fine outdoor dining. Their hard, smooth molded melamine seamless surfaces are available in a variety of rich decors and promise no gaps, cracks or graying with age. Built to hold up under the harshest weather conditions, the Atlanta tables are UV resistant and impervious to salt air and chlorine.

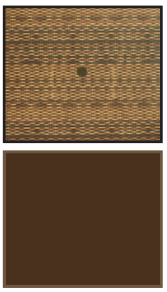
Wicker Decor

Teak Decor

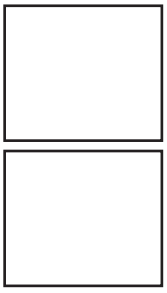
White

Shiplap Decor

www.resortcontract.com • sales@resortcontract.com

Atlanta 48” & 32” Pedestal Tables

Spare Parts

Umbrella Plug USSP0029 to USSP0032

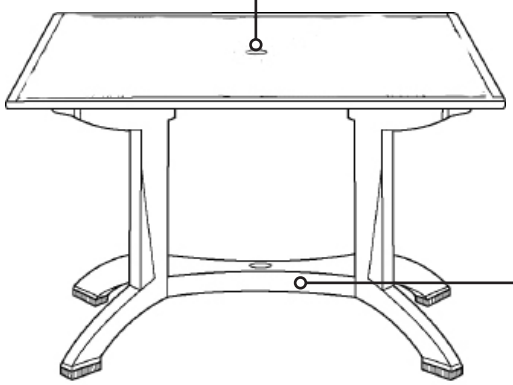

Hardware Kit & Brackets - USSP0017 and USSP0018

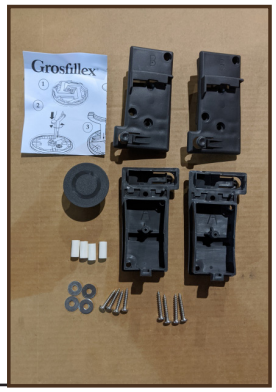

Long Brace - USSP0206

Hardware Kit & Footpads - USSP0210 & USSP0213

Reference	Description
USSP0017	HDW KIT/BRACKETS BALC LEG CHAR
USSP0018	HDW KIT/BRACKETS BALC LEG WHIT
USSP0210	HRDW KIT & FTPADS BALC LEGS WH
USSP0213	HRDW KIT & FTPADS BALC LEGS CH
USSP0206	BRACE LONG BALCONY LEG WOOD
USSP0029	UMB STD PLUG TABLE WHITE
USSP0031	UMB STD PLUG TABLE WOOD
USSP0032	UMB STD PLUG TABLE BRONZE

ORIGINAL SPARE PART QUALITY